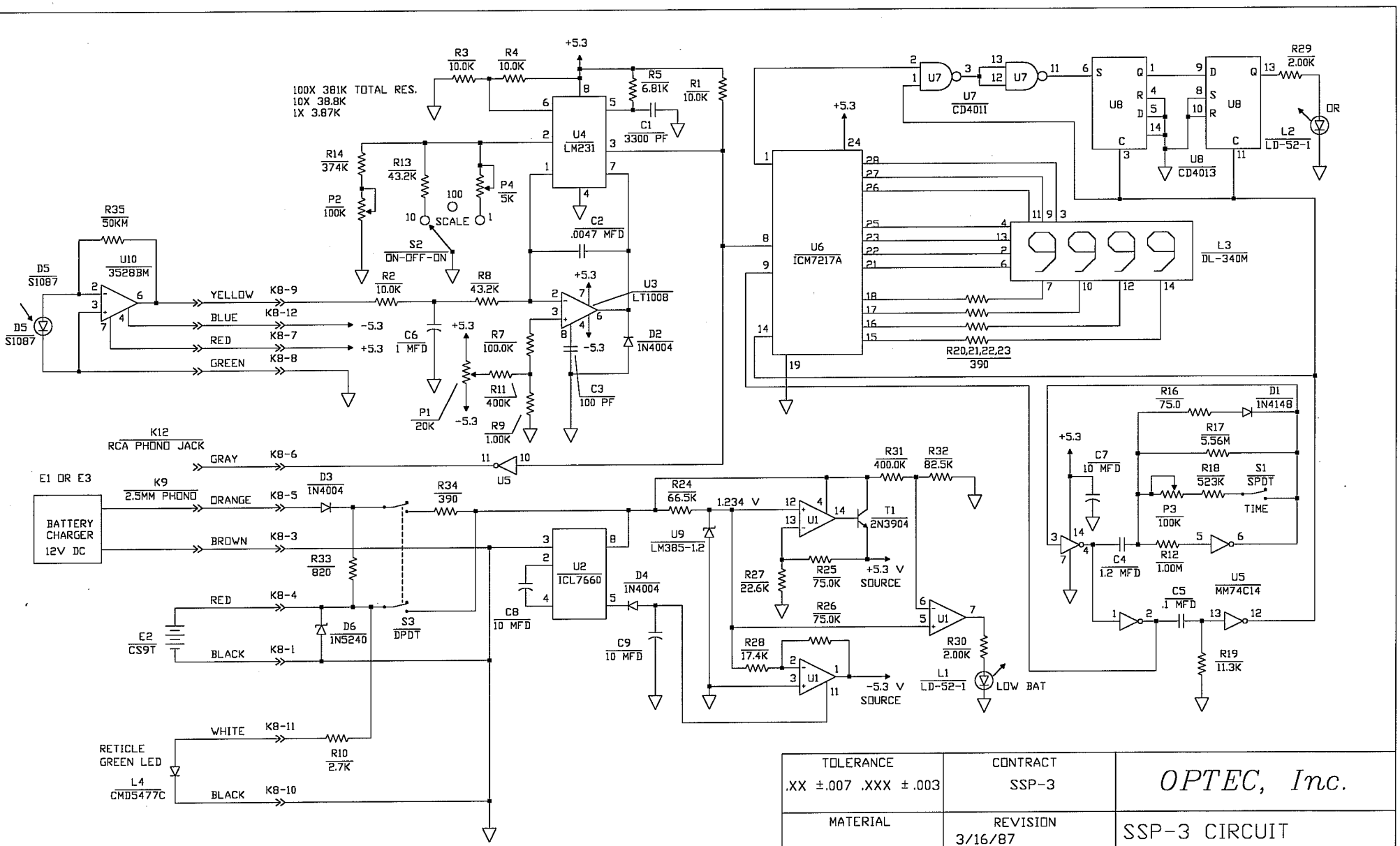

TOLERANCE	CONTRACT	OPTEC, Inc.
.XX ±.007 .XXX ± .003	SSP-3	
MATERIAL	REVISION 3/16/87	SSP-3 CIRCUIT MID 1987 AND EARLIER
FINISH		SCALE: NO: 17-03013