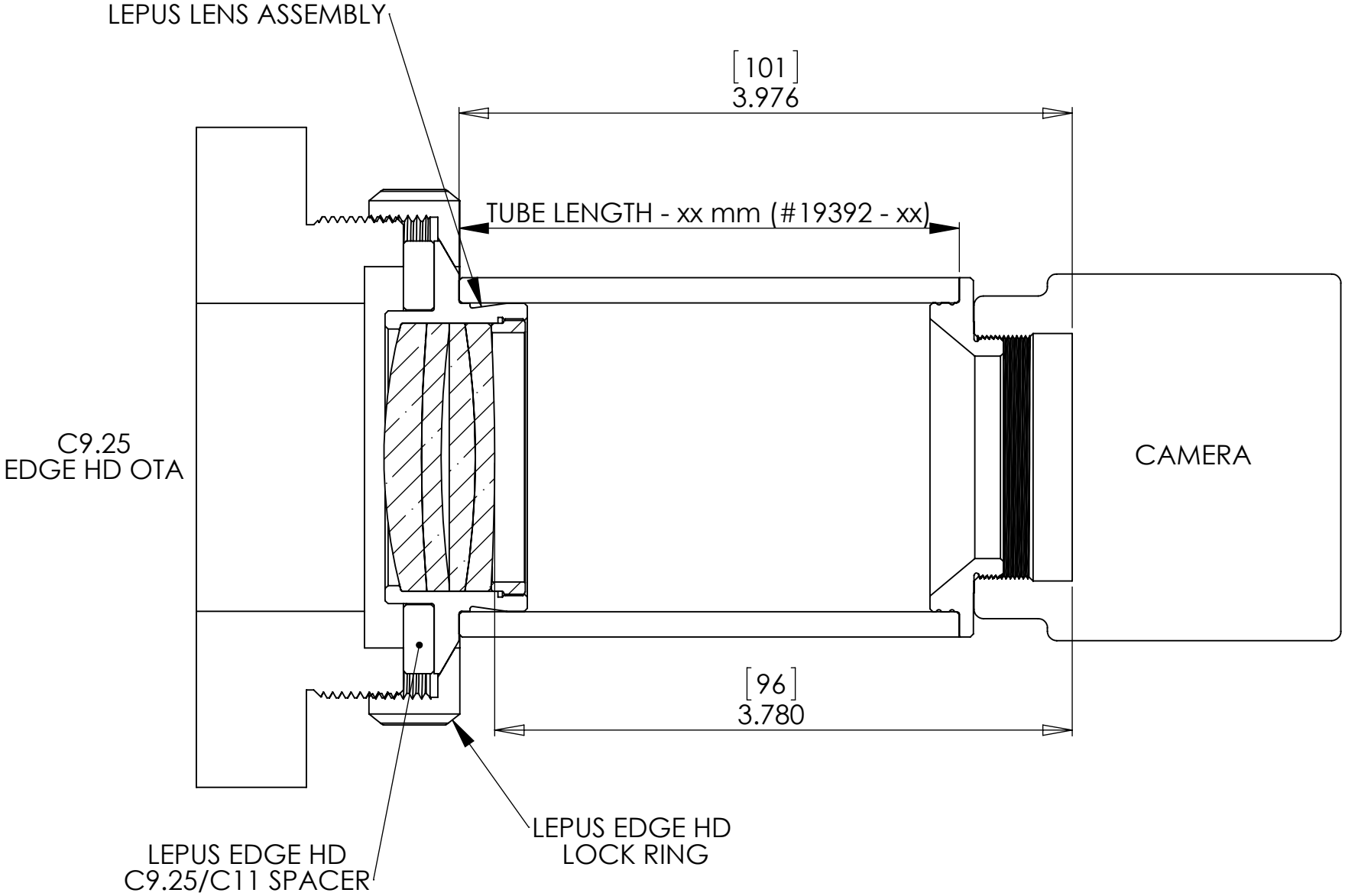
LEPUS LENS ASSEMBLY
[101]
3.976
TUBE LENGTH - xx mm (#19392 - xx)
C9.25
EDGE HD OTA
CAMERA
[96]
3.780
LEPUS EDGE HD
LOCK RING
LEPUS EDGE HD
C9.25/C11 SPACER